Poliform

Dream

Dream bed, design Marcel Wanders, 2006
Dream, designed by Marcel Wanders. To simply call it a bed does not do it justice. It is a system that actually furnishes the resting area in an original and personalized way. A series of panels combine to create a headboard that can be customized in different fabrics and colors. The bed has an upholstered structure, using the fabric of choice. The night table transforms from a unique storage container into a pouf simply by just turning the cover.

Night collection
Variety is the word to define the collection: eleven different proposals, eleven ideas for the night area; functionality, design and emotions are joined together in beds with a strong personality. To complete the choice there are “dedicated” containers, coherent in style, along with one multipurpose serie, which can be freely combined. Conceived to really satisfy any resting requirements, this system includes also mattresses, pillow and complements.

Finishings:
Bedframe and headboard with removable cover in fabric, eco-leather and leather. Upholstered wall panelling with cover removable in fabric and eco-leather and not removable in leather.

Poliform spa
via Montesanto 28 casella postale n. 1 22044 Inverigo (co) Italy tel +39/0316951 fax +39/031699444
www.poliform.it info.poliform@poliform.it

Poliform

Dream

Dream bed, design Marcel Wanders, 2006

Dimensions:

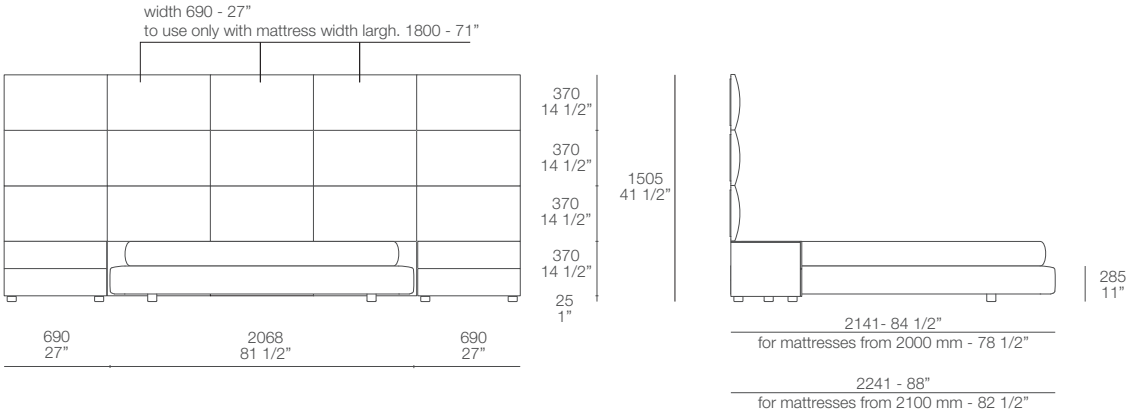

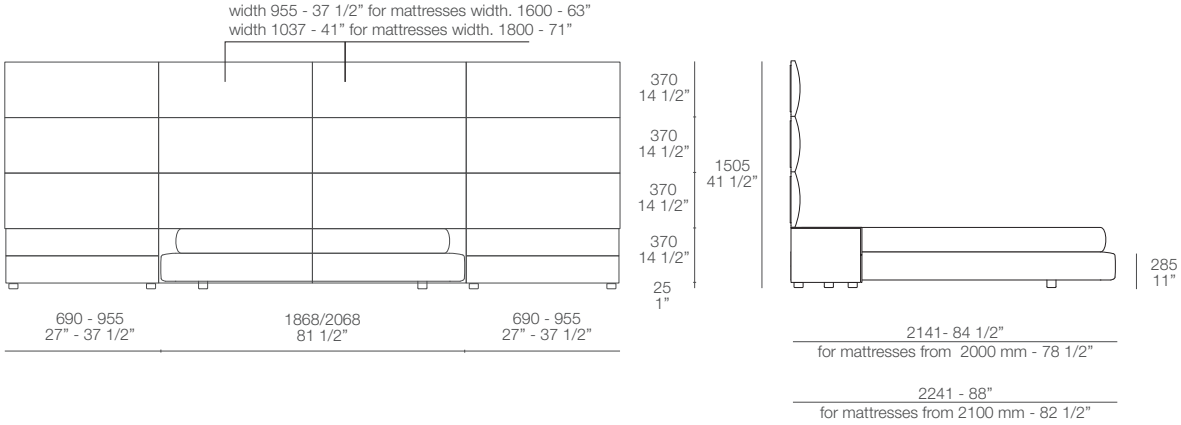

Queen size mm 1792 x 2173
inch 70 1/2” x 85 1/2”

King size mm 2198 x 2173
inch 86 1/2” x 85 1/2”

Poliform spa
via Montesanto 28 casella postale n. 1 22044 Inverigo (co) Italy tel +39/0316951 fax +39/031699444
www.poliform.it info.poliform@poliform.it

Poliform

Dream

Boiserie Dream, design Marcel Wanders, 2006

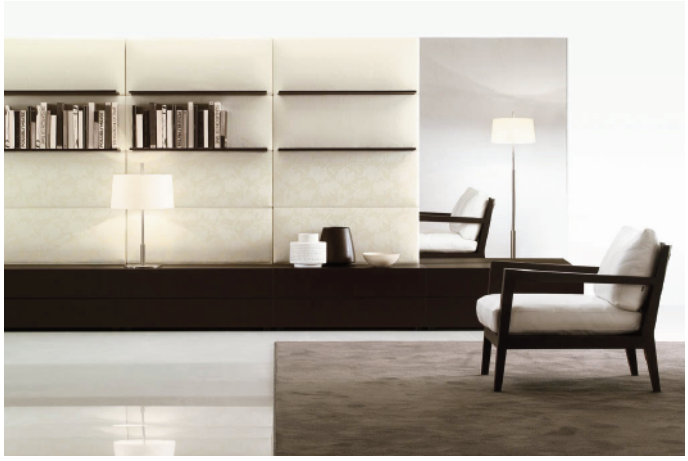

Technical characteristics and finishings:
Beyond the headboard, the system of panels can be used to compose a wall panelling including shelves in mat lacquered colours, glossy lacquered colours, walnut c. and wenge or wall mirrors.

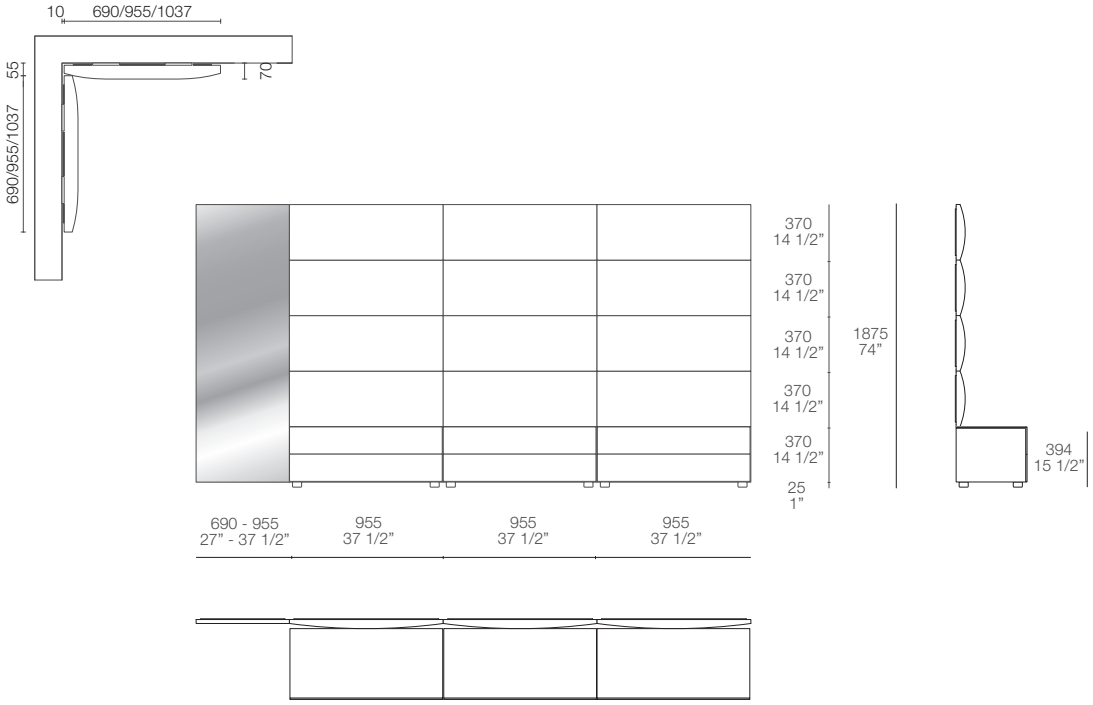

Poliform spa
via Montesanto 28 casella postale n. 1 22044 Inverigo (co) Italy tel +39/0316951 fax +39/031699444
www.poliform.it info.poliform@poliform.it

Poliform

Dream Due

Dream bed, design Marcel Wanders, 2006

Finishings:
Upholstered headboard and bed frame with removable cover in fabric, eco-leather and leather.

Dimensions:

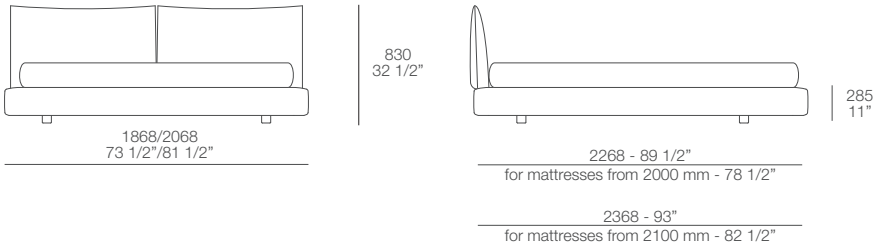

Queen size mm 1792 x 2300
inch 70 1/2” x 90 1/2”

King size mm 2198 x 2300
inch 86 1/2” x 90 1/2”

Dimensions for mattresses:

mm 1600 X 2000
mm 1600 X 2100
mm 1800 X 2000
mm 1800 X 2100

Poliform spa
via Montesanto 28 casella postale n. 1 22044 Inverigo (co) Italy tel +39/0316951 fax +39/031699444
www.poliform.it info.poliform@poliform.it

Poliform

Dream

Dream containers, design Marcel Wanders, 2006

Finishings:
Mat lacquered colours, glossy lacquered colours, walnut c. and wenge. Round night table mat lacquered colours and glossy lacquered colours. Upholstered little mattress for bench with outstretched cover in leather. The writing desk can be totally or partially surmounted on the chest of drawer.

Dimensions:

Night tables

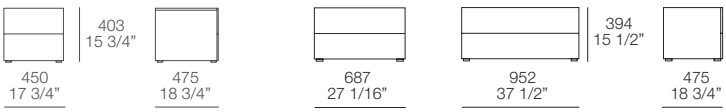

Night table/pouf

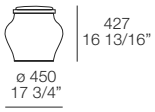

High chest of drawer

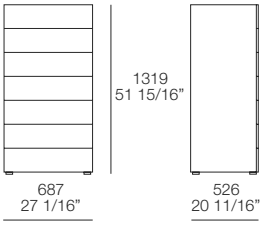

Chest of drawer

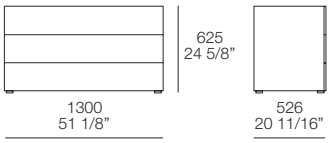

Writing desk

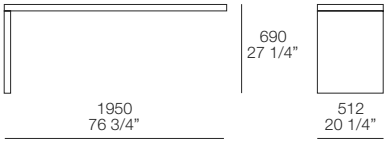

Benches

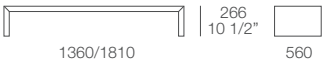

Chest of drawer for bench

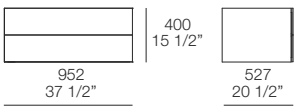

Mattress for bench

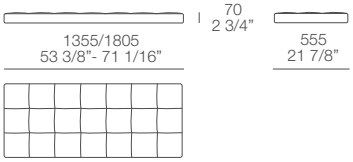

Poliform spa
via Montesanto 28 casella postale n. 1 22044 Inverigo (co) Italy tel +39/0316951 fax +39/031699444
www.poliform.it info.poliform@poliform.it